REDZ
SMART COMMUNICATION

redz-sc.com hi@redz-sc.com

ZTerminal FOR WINDOWS

ZTerminal for Windows

Setting up, checking and updating REDZ devices: LKM, HUR IO, HUR V-I and BKV.

A general terminal for serial and TCP links, also with several sockets.

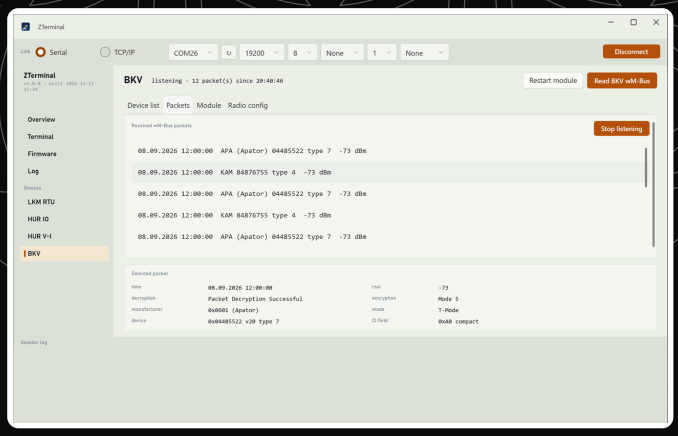

ZTerminal for Windows is the Windows program for setting up, checking and updating REDZ devices. It works with the LKM meter reader, the HUR IO modules, the HUR V-I metering module and the BKV wM-Bus module, and it is also a general terminal for serial and TCP links.

Main Features

- **Overview:** reads the identity and the diagnostics of the selected product in one round.
- **LKM RTU:** settings and the IEC address of each meter, monitoring values and the values read from the meters.
- **HUR IO:** inputs, outputs and settings of the 8DO, 8DI, 8AI and 5AO modules; Detect type suggests the type.
- **HUR V-I:** metering with a phase diagram, harmonics, configuration and calibration.
- **BKV:** radio configuration, the device list with DLF files and received wM-Bus packets.
- **Read back after a write:** on the LKM RTU and HUR IO pages, ZTerminal reads the device again and shows what it now holds.

Key Figures

REDZ devices
setting up, checking and updating LKM RTU, HUR IO, HUR V-I and BKV

Modbus RTU and TCP
over a serial port or TCP/IP, also RTU over TCP for a serial server

No installation
one program file, ZTerminal.exe, for 64-bit (x64) Windows

Firmware update
checks the file before it sends anything; Recovery for a device stuck in update mode

General terminal
text or hex, once or periodically, from a file, several TCP sockets

Session log
save it and send the file to support

Features in Detail

Terminal

- Over TCP/IP it can open several sockets to the same endpoint and send to all of them.
- Sending from a file: a text file (.txt), a CSV file (.csv) or an Excel file (.xls, .xlsx or .xlsm).
- Capture: every line that appears in Received is written to the file at once.

LKM RTU

- The LKM RTU page configures and checks an LKM optical meter reader over Modbus.
- Everything the page shows was read from the device; after a write, ZTerminal reads the device again and shows what it now holds.
- Find unit id asks the device for its own unit id.

HUR IO and HUR V-I

- The HUR IO page works with the four HUR IO module types: 8DO (eight digital outputs), 8DI (eight digital inputs), 8AI (eight analog inputs) and 5AO (five analog outputs).
- Detect type asks the device a few read-only questions and selects the type that answered.
- The HUR V-I page works with the HUR V-I energy metering module: three voltage and three current inputs.

BKV

- Read BKV wM-Bus reads the module information, its firmware, its clock, the radio configuration and the device list in one round.
- Open DLF reads a device list file (CSV, or an Excel file in .xls, .xlsx or .xlsm format) and replaces the list on the screen with it.
- While the BKV page is open and the connection is open, ZTerminal listens for the packets the module receives from meters.

Firmware update and Log

- It checks that the file is complete (its length matches the length written inside it) and that the hardware type written inside it is the one of the device you chose.
- The page then tells you, step by step, when to turn the device off and on.
- The Log page shows the session log: everything ZTerminal records while it runs, one line per event, the newest at the bottom.

Connections

- You open one connection, over a serial port or over TCP/IP, and then choose in the left bar what to do on it.
- The Overview, LKM RTU, HUR IO and HUR V-I pages talk Modbus.
- On a serial link they always use Modbus RTU; there is nothing to choose.
- RTU over TCP sends Modbus RTU frames through the TCP connection, for a serial server that passes the bytes on to a serial line unchanged.
- The Terminal page does not use this choice: over a serial link and over TCP/IP it sends exactly what you type.

Good to know

- The Overview page only reads; it does not change any setting of the product.
- Only one page listens to the line at a time.
- The session log is kept only while ZTerminal runs; it is not written to disk by itself.
- Save the session log right after the problem.

The devices ZTerminal works with

- LKM: the meter reader that answers over Modbus RTU.
- HUR IO: four Modbus input and output modules - 8DO (digital outputs), 8DI (digital inputs), 8AI (analog inputs) and 5AO (analog outputs).
- HUR V-I: the metering module.
- BKV: the wM-Bus module.

Technical Data

Windows	ZTerminal for Windows runs on 64-bit (x64) Windows.
Runtime	ZTerminal does not need a separate installation of .NET or of any other runtime: everything it needs is inside its program file.
Installation	The archive holds a single file, ZTerminal.exe. Unpack it to any folder and start it from there; nothing is installed and nothing is added to the Start menu.
Settings	ZTerminal remembers your choices in a small settings file in your Windows user profile, in a folder named ZTerminal.
Serial link	For a serial link, choose the COM port, the baud rate (300 to 115200 baud), the data bits (5 to 8), the parity, the stop bits (1, 1.5 or 2) and the flow control.
Defaults	The defaults are 19200 baud, 8 data bits, no parity, 1 stop bit and no flow control.
TCP/IP	For a TCP/IP link, enter the host name or IP address and the TCP port (502 by default).
Sockets	The field after the port sets how many sockets ZTerminal opens to the same endpoint, from 1 to 32.
Modbus	Modbus RTU on a serial link; over TCP/IP, Modbus TCP or RTU over TCP.
Firmware file	A .bin file for LKM or HUR devices.
Session log	The session log holds the newest 20000 lines; older lines are dropped.

Supported Devices

	LKM RTU	HUR IO	HUR V-I	BKV
Identity and diagnostics on the Overview, in one round	●	●	●	●
Modbus RTU or Modbus TCP	●	●	●	
Settings, monitoring and register values	●			
Inputs, outputs and settings: 8DO, 8DI, 8AI and 5AO		●		
Metering, configuration and calibration			●	
Device list, radio configuration and received packets				●
Firmware update	●	●	●	

A HUR IO module does not report which of the four types (8DO, 8DI, 8AI or 5AO) it is.

The Terminal page is not tied to a device: it sends and receives data on any serial port or TCP connection.

Typical Application

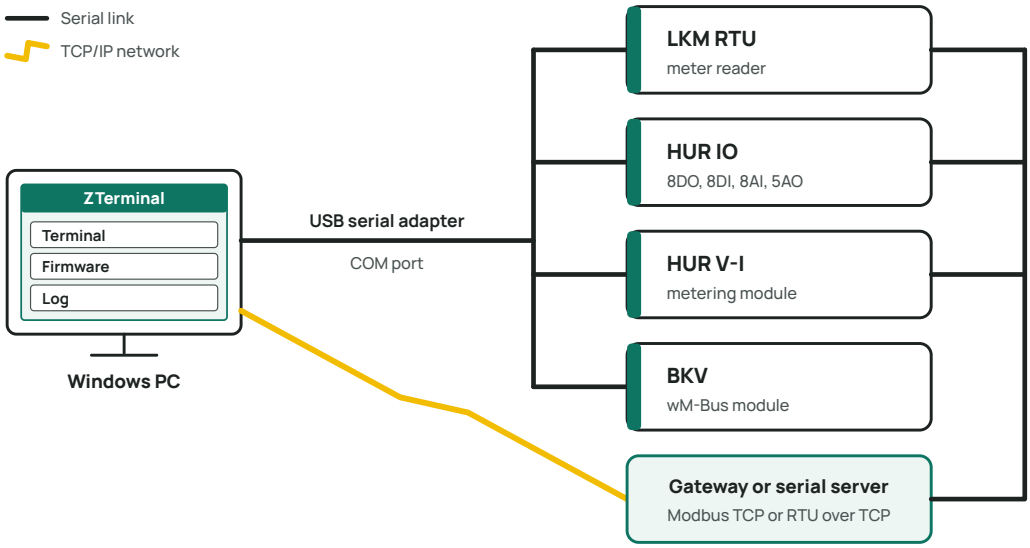

To work with a device you need a way to reach it: a serial port of the PC (a COM port, for example a USB serial adapter) or a network connection to a TCP/IP endpoint.

Download: ZTerminal for Windows on redzsoftware.com - an archive that holds a single file, ZTerminal.exe, and the User Manual, also as PDF.